A VCC PRODUCT FAMILY

engineered to light up your design
www.vcclite.com
1.800.522.5546

5600 Series T-1 Right Angle LED Assembly

Description and Features

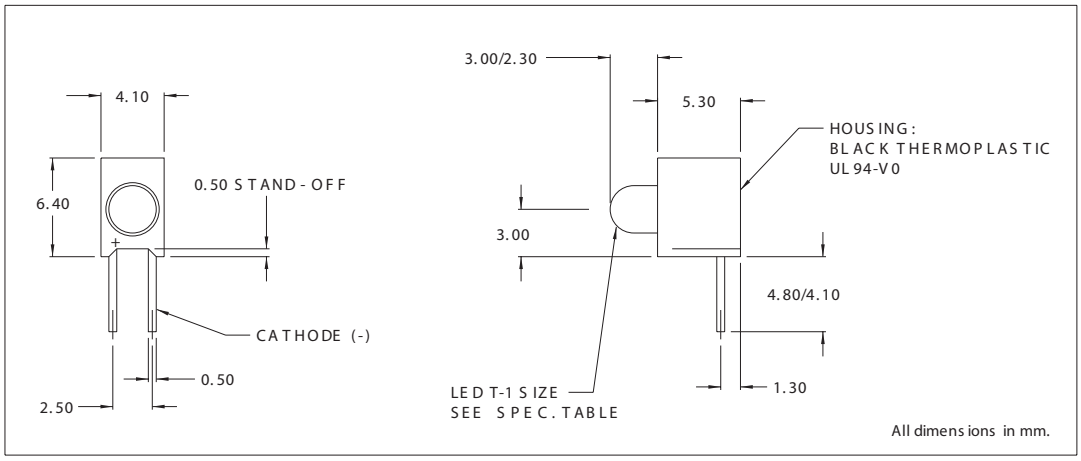

Features

- Small T-1 size lamp preassembled into Nylon plastic block.
- Height and spacing alignment, saves assembly cost.
- Super Brite and High Brite LEDs.
- High light output - diffused lens.
- High contrast ratio.
- Low current - only 2 mA.
- Built -in resistor chip operates off 5 volt supply without external resistor.
- Standoffs prevent flux entrapment.
- RoHS Compliant

Housing: Black Nylon,UL94V-O

Note: Alternate LEDs are also available in this package as a standard variation.

Electro-Optical Characteristics and Ratings

Part Number	Color	Typ. Intensity (mcd)	Rated Current (mA)	Continuous Forward Current Max. (mA)	Forward Voltage Typ. (V)	Forward Voltage Max. (V)	Reverse Break-down Voltage Min. (V)	Peak Wave length (nm)
5600F1	Red	10	10	30	2.0	3.0	5	650
5600F3	Amber	7	10	30	2.2	3.0	5	603
5600F5	Green	16	10	30	2.2	3.0	5	562
5600F7	Yellow	6.3	10	30	2.1	3.0	5	585
5600F1LC	Red	2.5	2.0	7	1.8	2.2	5	635
5600F5LC	Green	2.1	2.0	7	1.8	2.2	5	565
5600F7LC	Yellow	1.8	2.0	7	1.9	2.7	5	583
5602F1-5V	Red	8.0	10	20	5	7.5	5	655
5602F3-5V	Amber	8.0	10	15	5	7.5	5	583
5602F5-5V	Green	8.0	10	15	5	7.5	5	565

CML and Chicago Miniature Lamp are registered trademarks of Visual Communications Company, LLC.