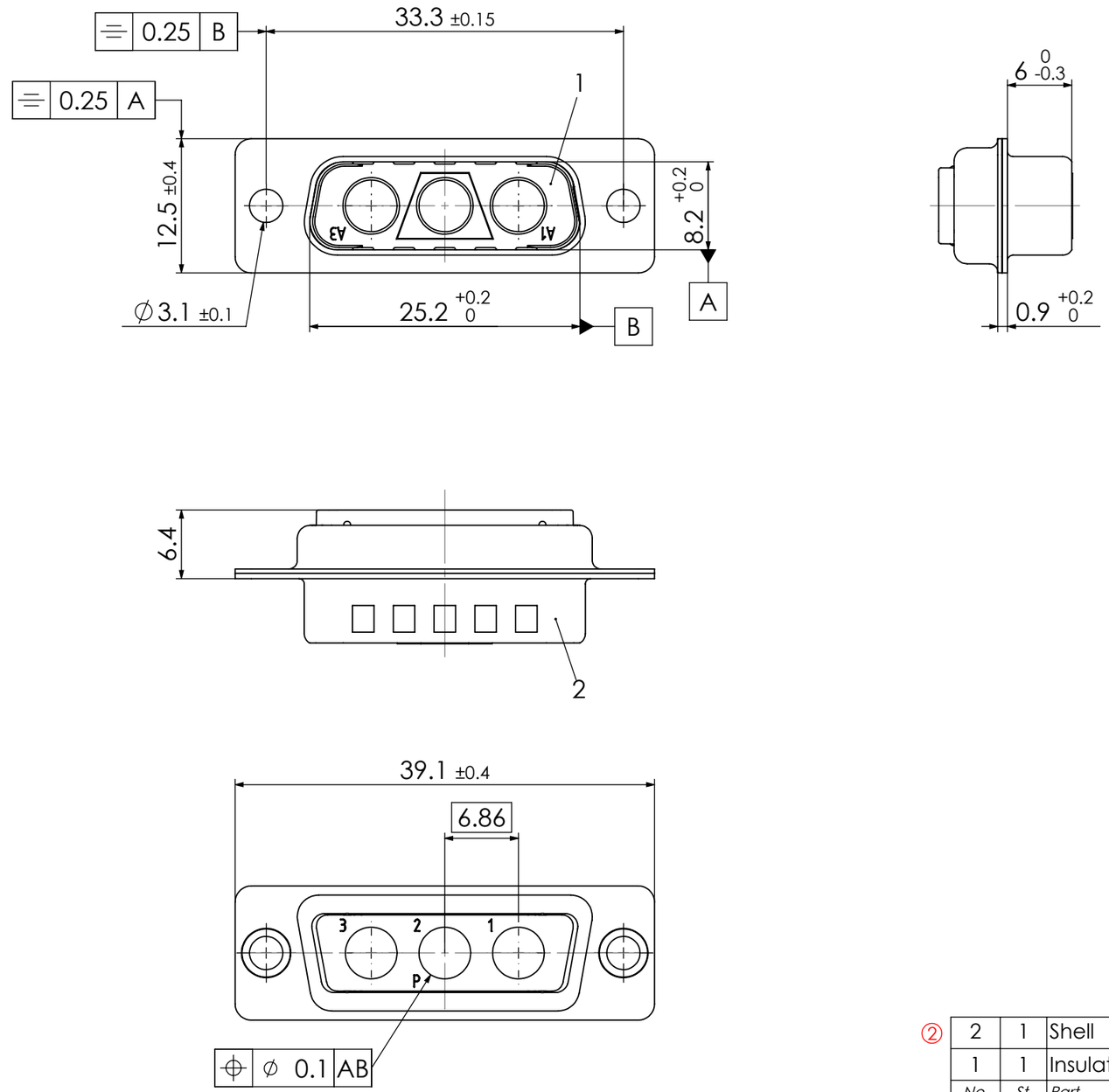

RoHS compliant

② 2	1	Shell	Steel	tin plated
1	1	Insulator	PBT (-55°C - +130°C)	black
No.	*St.*	*Part*	*Type Description/Material*	*Surface plating/Colour/Class*

2	12-04-2006	21827		
1				
REV.	DATE	CH.-NO.		

Measurement without tolerance occ. to ISO 2768-m

SCALE 2:1

NAME / DATE

DRAWN Denzinger 02-06-2004

CHECKED sschref 12-04-2006

FCT a molex company

ORIGINAL: DIN A3-DRAWING AS A FILE

TITLE

D-Sub Mixed-Layout Connector

DWG.NO. F3W3PC-K120

REV. 2

REPLACEMENT FOR:

PAGES 1

COMMENT:
ALL RIGHTS ARE RESERVED BY US FOR THIS DRAWING. WITHOUT OUR PRIOR CONSENT,
IT MAY NEITHER BE DUBLICATED NOR MADE AVAILABLE TO A THIRD PARTY,
AND IT ALSO MAY NOT BE IMPROPERLY USED BY TE RECEIVER, OR A THIRD PARTY.