MATERIAL NUMBER	OLD PART NUMBER	FINISHED LENGTH
120113-0002	BEYA01P-FBP-05	16.40′ +6.50″ -0 [5.0M +165.1 -0]

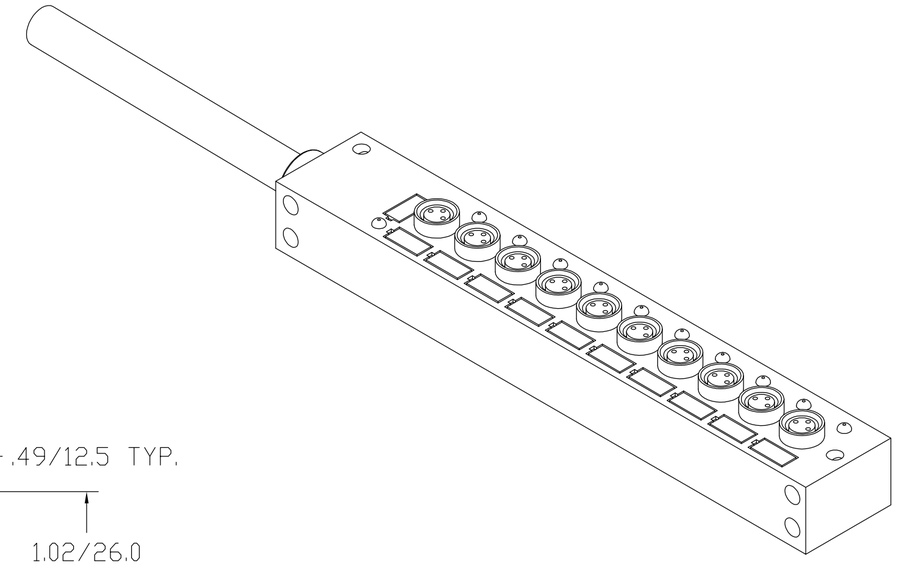

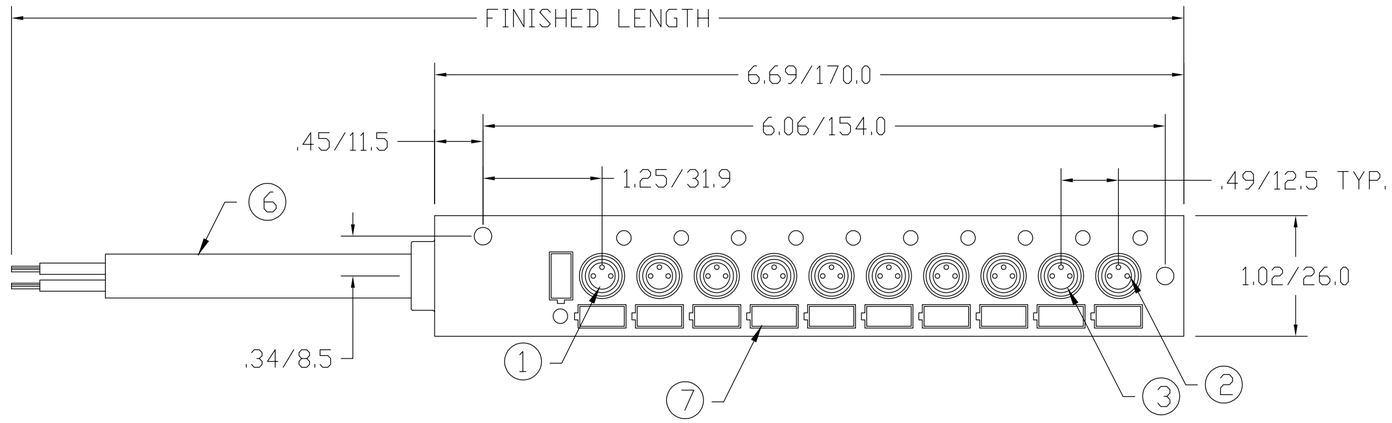

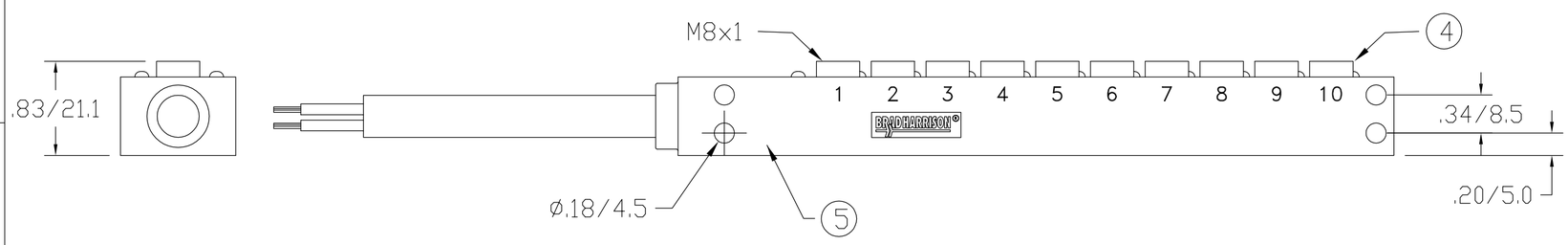

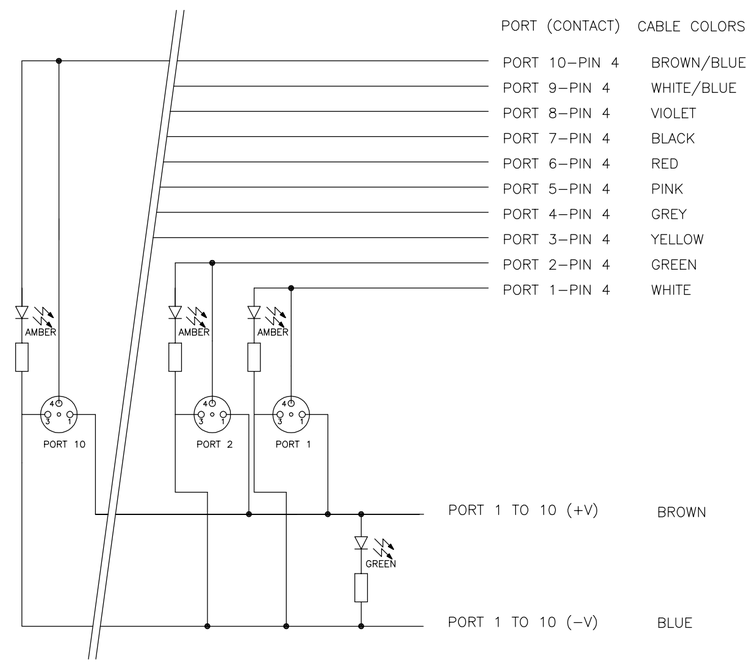

WIRING DIAGRAM

ITEM	COMPONENT	MATERIAL	FINISH
1	INSERT	POLYESTER	YELLOW
2	CONTACT SOCKET	COPPER ALLOY	GOLD OVER NICKEL
3	O-RING	VITON	RED
4	RECEPTACLE SHELL	BRASS	NICKEL PLATED
5	HOUSING	NYLON	YELLOW
6	CABLE- 18AWG, 2 CONDUCTOR; 22 AWG, 10 CONDUCTOR, 300V	PVC	YELLOW
7	LABEL	ABS	WHITE

VOLTAGE RATING	10-30 VDC
AMPERAGE RATING PER PORT	2 AMPS
PROTECTION	IP67
OPERATING TEMPERATURE	-20°C TO 90°C

RELEASD DRAWING
EC NO: WEU2010-0058
DRWN: LHARTMAN 8/19/09
CH'KD: BWOODMAN 2009/08/21
APPR: JFMURPHY 2009/08/21
DESCRIPTION
REV A

QUALITY SYMBOL
▼=0
(C)=0

GENERAL TOLERANCES (UNLESS SPECIFIED)

	mm	INCH
4 PLACES	±----	±----
3 PLACES	±----	±----
2 PLACES	±----	±.01
1 PLACE	±0.3	±----
ANGULAR ±----°		

DRAFT WHERE APPLICABLE MUST REMAIN WITHIN DIMENSIONS

DIMENSION STYLE: IN/MM
SCALE: NTS
DESIGN UNITS: METRIC
THIRD ANGLE PROJECTION

DRAWN BY: LHARTMAN DATE: 2009/08/21
CHECKED BY: BWOODMAN DATE: 2009/08/21
APPROVED BY: ---- DATE: ----

TITLE: NANO-CHANGE MPIS 10 PORT PNP SIDE ENTRY 5 METER PUR CABLE

molex MOLEX INCORPORATED

MATERIAL NO.: SEE CHART
DOCUMENT NO.: SD-120113-004
SHEET NO.: 1 0F 1
SIZE: C

THIS DRAWING CONTAINS INFORMATION THAT IS PROPRIETARY TO MOLEX INCORPORATED AND SHOULD NOT BE USED WITHOUT WRITTEN PERMISSION