SYSTEM NO. 30639

PROPRIETARY NOTE: THIS DRAWING AND ALL INFORMATION THEREON IS THE PROPERTY OF BREED TECHNOLOGIES, INC. AND IS CONFIDENTIAL AND PROPRIETARY AND MUST NOT BE MADE PUBLIC OR COPIED UNLESS EXPRESSLY AUTHORIZED IN WRITING BY BREED TECHNOLOGIES, INC. AND IS SUBJECT TO RETURN UPON DEMAND.

D10-59200-020

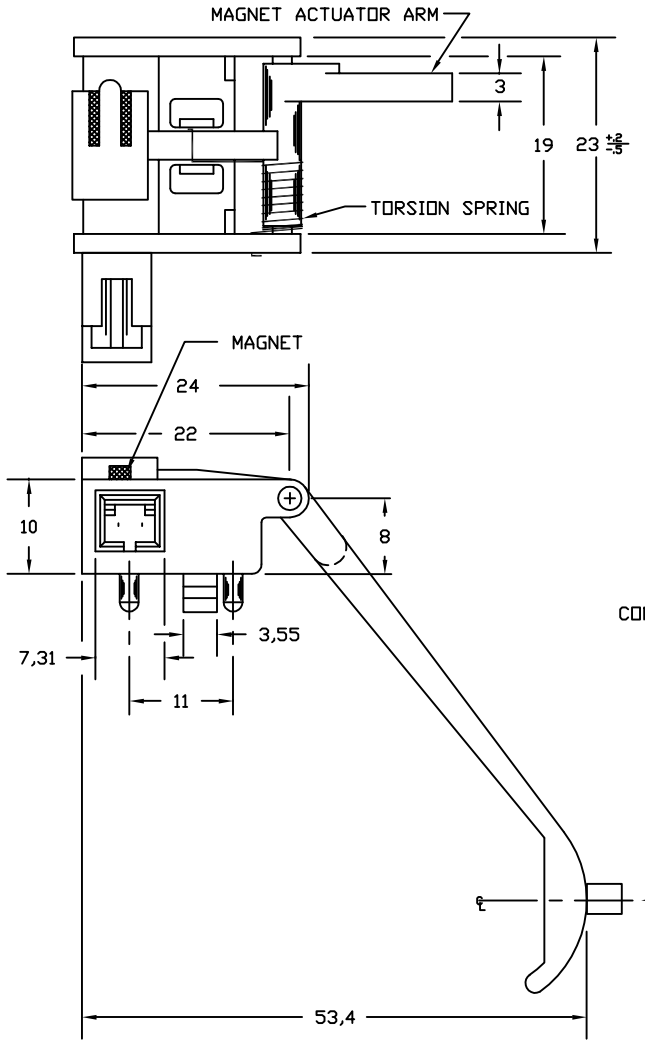

MATERIAL BASE:NYLON 6/6 W/15% GLASS FIBRE (BLACK)
ARM: 94V-0 POLYESTER W/30% GLASS FIBRE (BLACK)
CONNECTOR: 94V-0 POLYESTER W/30% GLASS FIBRE (BLACK)

OPERATING PARAMETERS
1.) OFF POINT: LESS THAN 15° ROTATION FROM REST POSITION
2.) ON POINT: GREATER THAN 2° ROTATION FROM REST POSITION

CONTACT RATINGS
CONTACT CAPACITY= 10 WATTS MAX.
SWITCHING VOLTAGE= 200 Vdc MAX.
SWITCHING CURRENT= .500 Adc MAX.
CONTACT RESISTANCE= .200 OHM MAX.

CONNECTOR PINS .025 IN^2, GOLD PLATED PHOSPHOR BRONZE

ALL DIMENSIONS IN mm
TOLERANCES: ±0,25 UNLESS OTHERWISE SPECIFIED

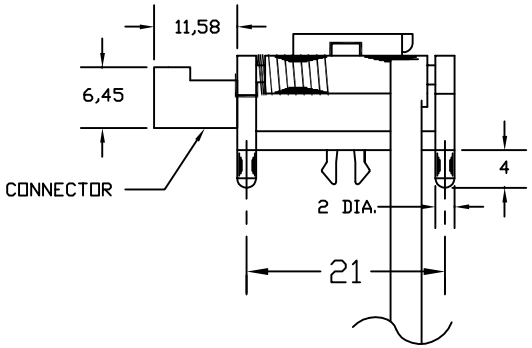

ACTUATION FORCE 2 GRAMS NOMINAL

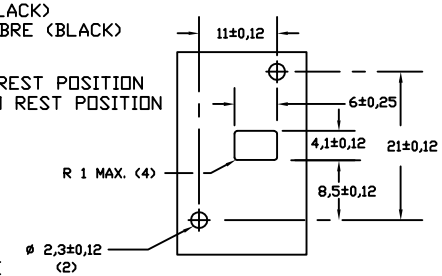

MATERIAL TO BE 1,6±0,21 THICK

SWITCH MOUNTING HOLE PATTERN

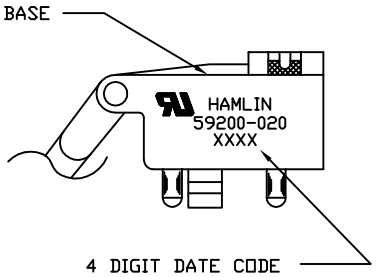

SWITCH ASSEMBLY						
AB	ADD PACKING -2 SHEET	B0049	CRJ	5/13/03	CRJ	5/13/03
REV.	DESCRIPTION OF REVISION	DCR NO.	BY	DATE	APP.	DATE

HAMLIN
BREED ELECTRONICS LIMITED PARTNERSHIP

DRAWN BY: KU DATE: 9/18/89
APP'D: BB DATE: 9/28/89

DCR NO. 4035
DRAWING NO. D10-59200-020
SHEET 1 OF 1