REVISION TABLE					
REV.	ECO #	DESCRIRTION	DATE	BY	APPROVED
24	AC095112	MODIFIED DIMENSIONING SCHEME UPDATED TO SOLIDWORKS	12/16/09	MF	TW

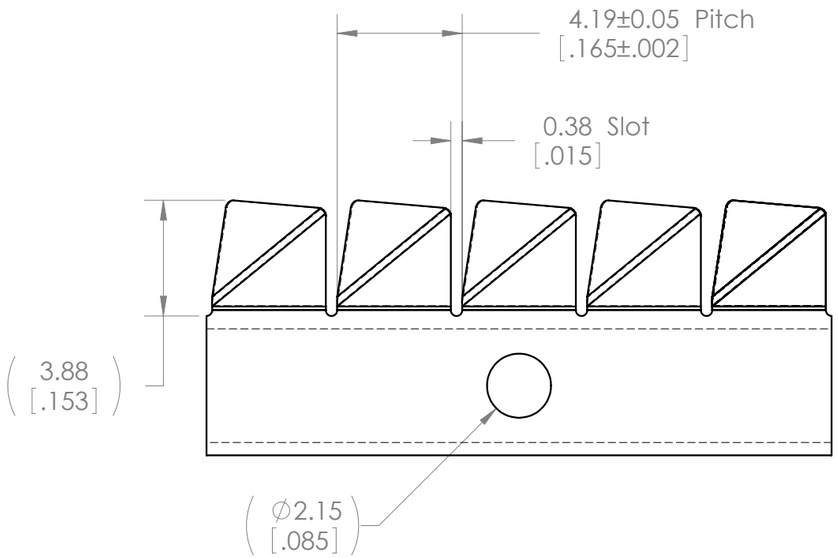

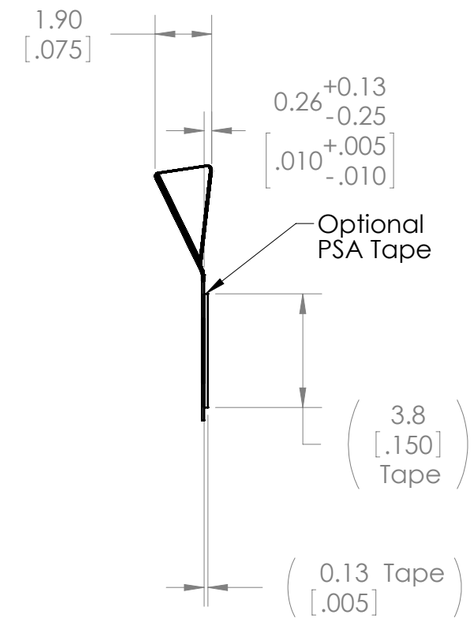

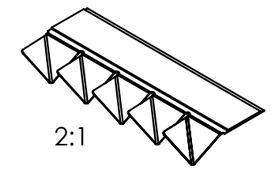

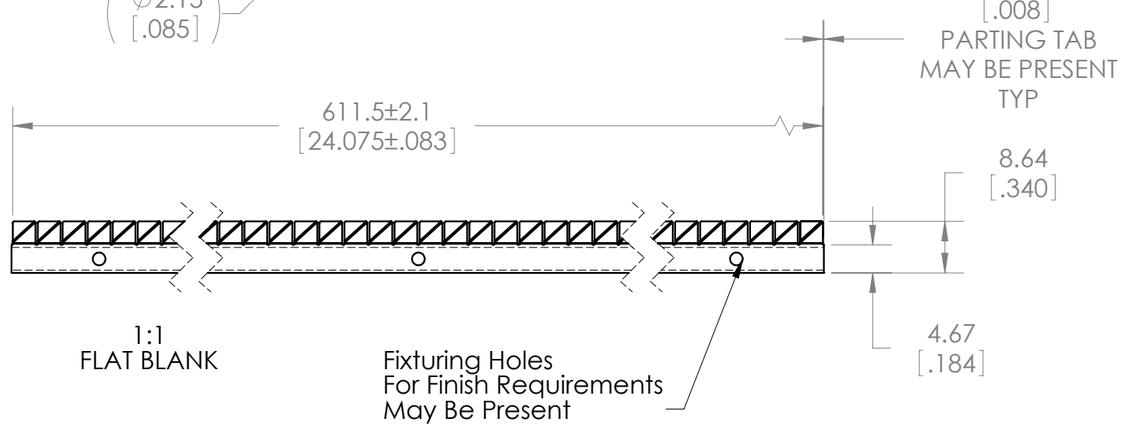

APPROVED
By Tim Wrona at 7:22 am, Dec 17, 2009

This 2d drawing is generated from a 3d solid model. Refer to 3d model for any dimensions not shown on this drawing. 3d model dimensions will always take precedent over drawing dimensions.

Block tolerances apply to metric units only. Dual dimensions shown are for reference only and are displayed in 3 places for conversion purposes only.

CAD MAINTAINED DRAWING. MANUAL CHANGES UNAUTHORIZED

STD PART REFERENCE: 0077-00xx

UNITS: MM (INCH)

TOLERANCES:
.X = ± .4
.XX = ± .2
.XXX = ± .1

ANGULAR:
X.X° = ± 3.0°
X.XX° = ± 1.0°

Laird TECHNOLOGIES

3RD ANGLE PROJECTION

DESIGNED IN SOLIDWORKS

MATERIAL: BECU ALLOY 25 1/2 H

HEAT TREAT: DHP 383 MINIMUM (500 GRAM LOAD)

FINISH: PLATING OPTIONS AS REQUIRED

STD THICKNESS: (0077) 0.076 ± .005 [.0030]

ULTRA SOFT THICKNESS: (0078) 0.051 ± .005[.0020]

PRODUCTION DRAWING CONTROLLED DOCUMENT

ROHS COMPLAINT: (BASE PART) YES

PART NUMBER SERIES: STANDARD 0097-0555

PART NUMBER SERIES: ULTRA SOFT 0078-0555

REV: 24

DATE: 12/16/2009

MODEL/DRAWN BY: MF

APPROVED BY: TW

INFORMATION CONTAINED IN THIS DOCUMENT IS CONFIDENTIAL AND PROPRIETARY TO LAIRD TECHNOLOGIES. IT MAY NOT BE DISCLOSED TO ANYONE WITHOUT WRITTEN AUTHORIZATION FROM LAIRD TECHNOLOGIES

SIZE B

SCALE: 5:1

SHEET 1 OF 1