版数 VER.	年月日 DATE	CN NO.	変更内容 DESCRIPTION	製図 DR.	担当 CHK.	査閲 APPD.	承認 APPD.

WISDOM承認 2013/02/19

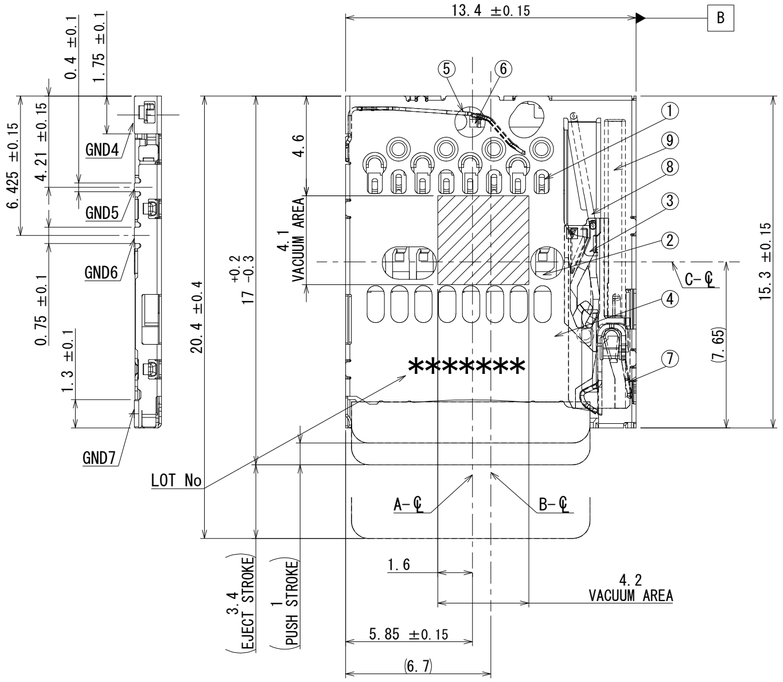

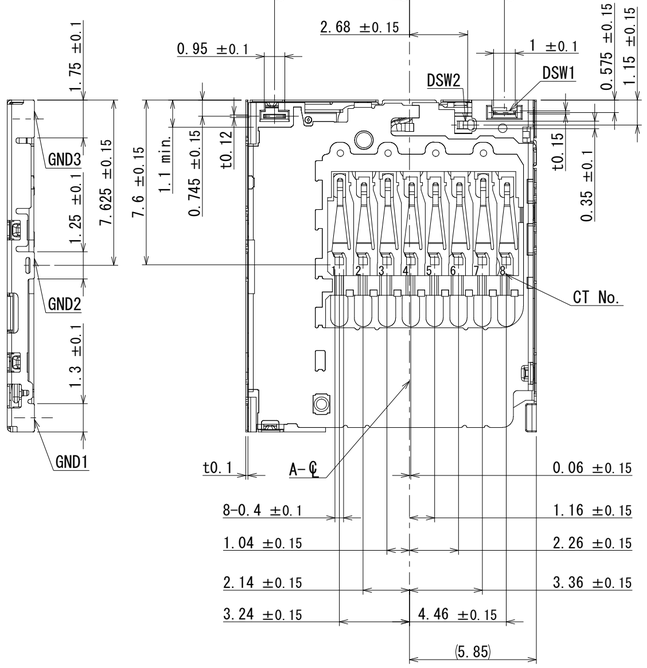

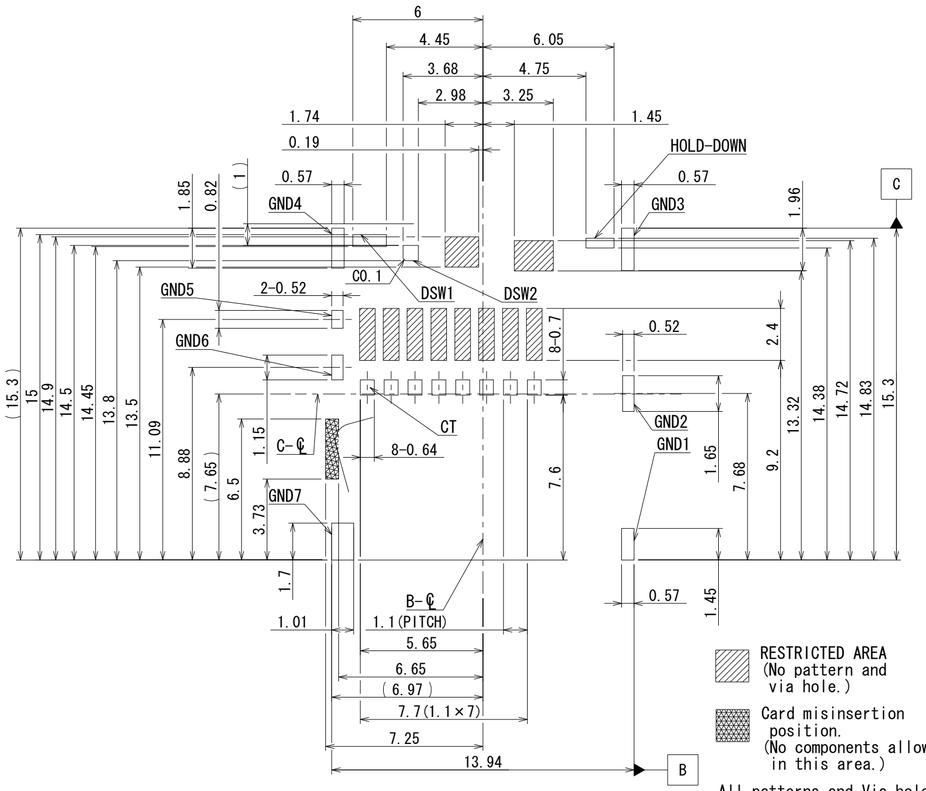

APPLICABLE P.W.B. DIMENSION(REF.)

RESTRICTED AREA
(No pattern and via hole.)

Card misinsertion position.
(No components allowed in this area.)

All patterns and Via holes under the connector should be coated by resist.

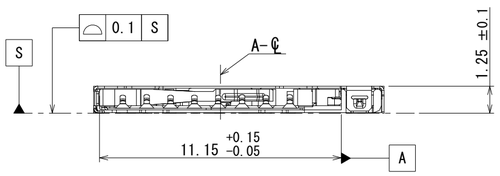

TABLE2.FINISH

		CONTACT AREA	TERMINAL AREA
①	CONTACT	Au (0.5μm MIN) OVER Ni (2μm MIN)	Au FLASH (0.03μm MIN) OVER Ni (1μm MIN)
⑤	DETECTION SWITCH 1(DSW1)	Au (0.1μm MIN) OVER Ni (1μm MIN)	
⑥	DETECTION SWITCH 2(DSW2)		
④	TOP COVER	-	Au FLASH (0.03μm MIN)

TABLE1.CIRCUIT

	WITHOUT CARD	WITH CARD
SWITCH	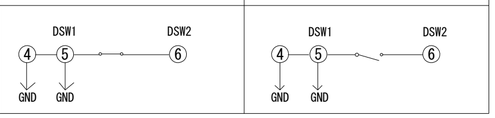	

符号 NO.	名称 DESCRIPTION	個数 QTY.	材料 MATERIAL	仕上 FINISH	備考 REMARKS
9	SPRING	1	STAINLESS	—	—
8	CAM FOLLOWER	1	STAINLESS	—	—
7	LOCK	1	STAINLESS	—	—
6	DETECTION SWITCH 2(DSW2)	1	COPPER ALLOY	TABLE2	TABLE1
5	DETECTION SWITCH 1(DSW1)	1	COPPER ALLOY	TABLE2	TABLE1
4	TOP COVER	1	STAINLESS	TABLE2	—
3	EJECT LEVER	1	GLASS FILLED Ny	—	—
2	INSULATOR	1	GLASS FILLED LCP	—	—
1	CONTACT	8	COPPER ALLOY	TABLE2	—

仕様書(SPECIFICATION)

第1版(ORIGINAL DATE) 14/FEB/2013

製図 DR.

一般公差(GENERAL TOLERANCE)

寸法(DIMENSION): . ±0.8 / .× ±0.4 / .×× ±0.1 / .××× ±

角度(ANGLES): ×° ± / ×°×' ±

単位(UNIT) : mm

担当 CHK. H.ICHIKAWA

査閲 APPD. A.MATSUNAGA

承認 APPD. A.NATORI

尺度(SCALE) 5:1

シリーズ(SERIES) ST11

名称(TITLE) ST11S008V4H

質量(MASS)

日本航空電子工業株式会社

JAPAN AVIATION ELECTRONICS INDUSTRY, LTD.

図面番号(DRAWING NO.) SJ113824

版数(VER.) 1

SIZE A2

JAE Connector DIV. Proprietary.Copyright(C) 2013, Japan Aviation Electronics Industry, LTD.