THIS IS ISSUED IN STRICT CONFIDENCE ON CONDITION THAT IT IS NOT USED AS A BASIS FOR MANUFACTURE OR SALE, AND THAT IT IS NOT COPIED, REPRINTED OR DISCLOSED TO A THIRD PARTY EITHER WHOLLY OR IN PART WITHOUT THE PRIOR WRITTEN CONSENT OF ITT CANNON.

REV	DCR	DESCRIPTION	DATE	APPROVAL

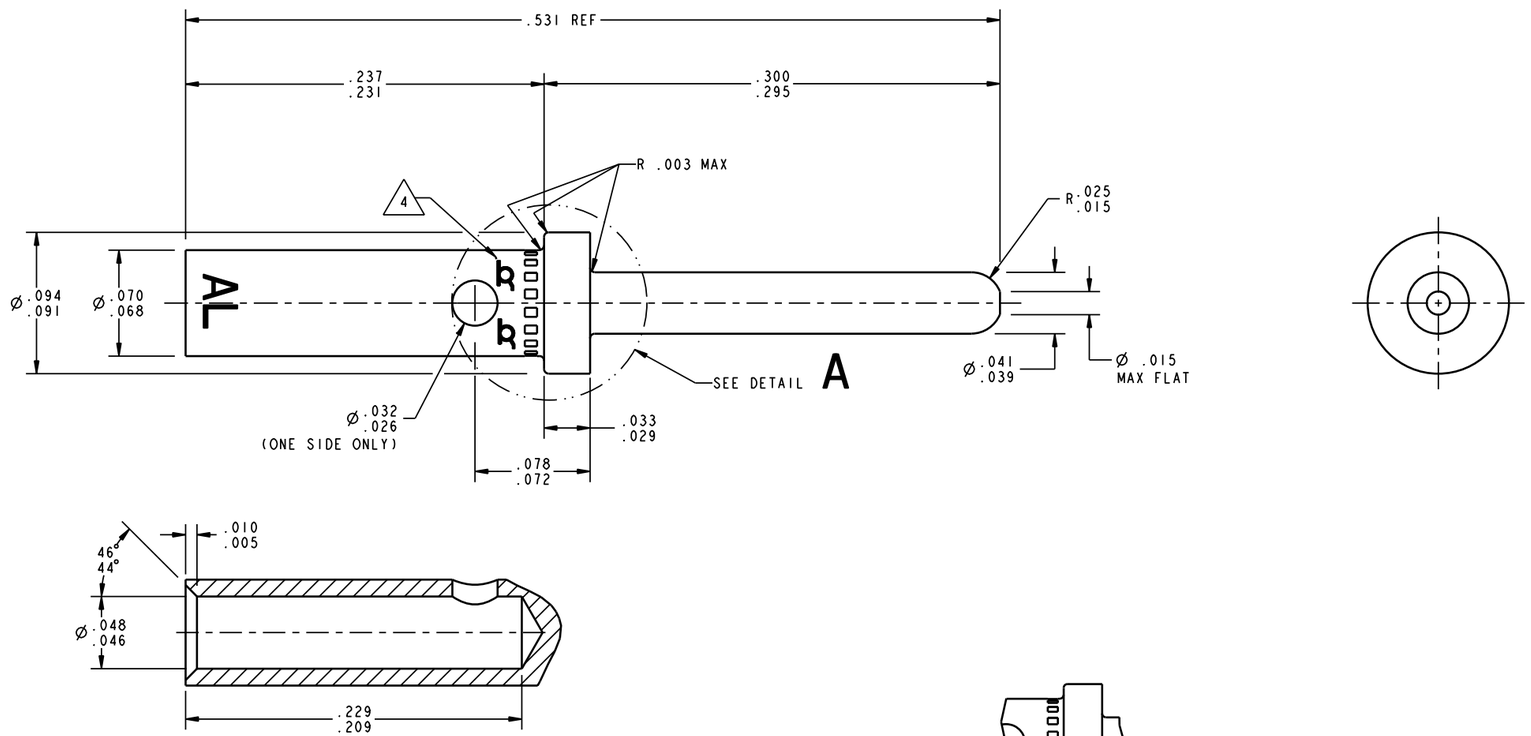

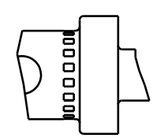

ALTERNATE DETAIL "A"

NOTE: INDENTS ARE PERMITTED ON CRIMP BARREL, HOWEVER INDENTS MAY NOT EXCEED MAX CRIMP POT O.D. AND NO BURRS ARE ALLOWED.

NOTES: UNLESS OTHERWISE SPECIFED

1. MATERIAL: ALUMEL
2. FINISH: NONE
3. ALL DIAMETERS TO BE CONCENTRIC WITH EACH OTHER WITHIN .003 T.I.R.
4. PARTS ACCEPTABLE WITH EITHER A PORTION OF OR ONE TRADEMARK ELIMINATED BY THE HOLE. PROVIDED ONE TRADEMARK IS IDENTIFIABLE.
5. CONTACT WILL ACCOMMODATE #20, #22 & #24 GAGE WIRES.
6. CRIMP CONTACT WITH AN M22520/1-01 CRIMP TOOL WITH AN M22520/1-04 LOCATOR.

RoHS COMPLIANCE CODE

NTC - not RoHS compliant
ROC - RoHS not hi-temp
ROH - RoHS & hi-temp (260°C)
NOTE - REFER TO TABLE/NOTES

ROH

ITT Cannon LLC
56 Technology Drive, IRVINE, CA 92618

UNLESS OTHERWISE SPECIFIED:
-DIMENSIONS AND TOLERANCES AS PER ASME Y14.5M-1994
-DIMENSIONS ARE IN INCHES AND (MM).
-REMOVE ALL BURRS AND SHARP EDGES .005 (0.13) MAX.
-DO NOT SCALE DRAWING.

DRAWN	Giovana Carachure	DATE 12/9/16	
CHECKED	Steve Nguyen	DATE 12/13/16	
APPROVED	Steve Nguyen	DATE 12/13/16	

TOL DECIMALS: .X ± .02 (0.51); .XX ± .01 (0.25); .XXX ± .005 (0.127); .XXXX ± .0005 (0.0127)
TOL ANGLES: X° ± 1°
SURFACE ROUGHNESS: 63 (1.6)

WEIGHT
DENSITY
VOLUME
SURFACE AREA
REF
SCALE 7.000
CAGE CODE 71468
3RD ANGLE PROJECTION
SIZE C | USE C | SHEET 1 / 1

CRITICAL DIM ▼ 0
SPC DIM ▼ 0
KEY CHARACTERISTIC KEY ▷0

PART NO 030-1997-026
DESCRIPTION CONTACT, PIN KJ20-ALUMEL

030-1997-026 | REV -

DWG FILE NAME: 030-1997-026

DWG. NO. 030-1997-026 | SH 1 | REV -

EXPORT CODE C

This document contains technical data that is subject to export controls under the Export Administration Act and Export Administration Regulations (15 CFR 730, et seq.). Any transfer of this data to non-US persons or to any location outside the United States must be in compliance with the Export Administration Regulations.