Honeywell

Honeywell Sensing and Control

55SS16

Actual product appearance may vary.

55SS Series Series Unipolar Hall-Effect Digital Position Sensor

Potential Applications

- Speed and RPM sensor
- Brushless DC motor commutation
- Motor and fan control
- Magnetic encoding
- Tachometer, counter pickup
- Disc speed, tape rotation sensing
- Flow-rate sensing

Product Specifications	
Product Type	Hall-Effect Digital Position Sensor IC
Package Style	Threaded Boss, Quick Connect Terminals
Supply Voltage	4.5 Vdc to 9.0 Vdc
Output Type	Sink
Termination Type	Male 0.093 in X 0.010 in Quick Connect Terminal
Magnetic Actuation Type	Unipolar
Operating Temperature Range	-40 °C to 100 °C [-40 °F to 212 °F]
Storage Temperature	-40 °C to 150 °C [-640 °F to 302 ° F]
Output Voltage	0.4 Vdc max.
Switching Time Rise (10 % to 90 %)	0.5 µs max.
Switching Time Fall (90 % to 10 %)	0.5 µs max.
Availability	Global
Supply Current (max. @ 25 °C)	4 mA
Output Current (max.)	20 mA
Operate Point @ 25 °C	40.0 mT [400 G] max.
Release Point @ 25 °C	5.7 mT [57 G] min.

Leakage Current max.	10 µA
Differential	5.7 mT [57 G] min.
Series Name	5SS

OPERATING CHARACTERISTICS (GAUSS) 3 5	MIN	TYP	MAX
OPERATE	—	245	400
RELEASE	57	148	—
DIFFERENTIAL	57	97	—
OPERATE			
RELEASE			
DIFFERENTIAL			

ISSUE NUMBER	RELEASE NUMBER	CATALOG LISTING
3	PR-4177	55SS16

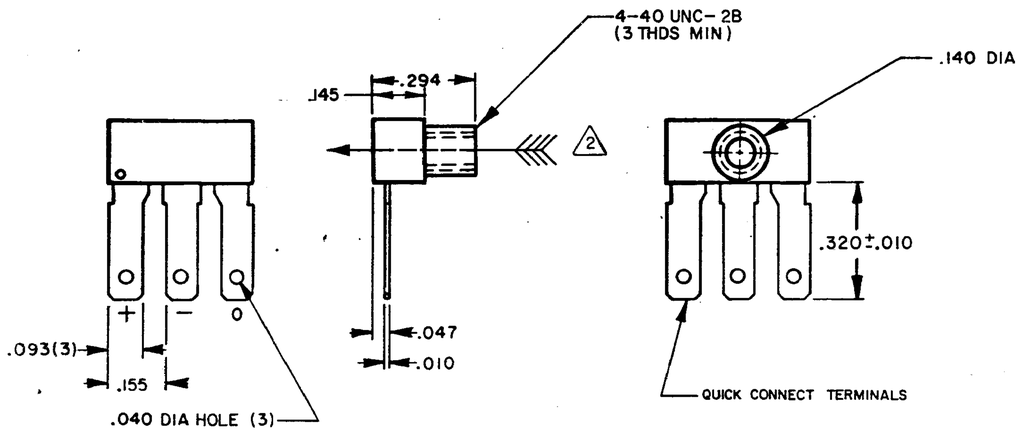

NOTES

1. CATALOG LISTING AND LOT NUMBER WILL BE STAMPED ON PACKAGE
2. TO ACTUATE THE DEVICE THE SOUTH POLE OF THE MAGNET OR MAGNETIC FLUX GENERATOR MUST BE PRESENTED TO THE CENTER OF THE FRONT SURFACE OF THE DEVICE. (THIS ASSUMES THE CONVENTION THAT THE DIRECTION OF THE EXTERNAL FLUX OF A MAGNET IS FROM THE NORTH TO THE SOUTH POLE OF THE MAGNET)
3. - THE MAGNETIC FIELD STRENGTH (GAUSS) REQUIRED TO CAUSE THE SWITCH TO CHANGE STATE (OPERATE AND RELEASE) WILL BE AS SPECIFIED IN THE OPERATING CHARACTERISTICS. TO TEST SWITCH AGAINST THE SPECIFIED OPERATING CHARACTERISTICS, THE SWITCH MUST BE PLACED IN A UNIFORM MAGNETIC FIELD
4. - VOLTAGE REFERENCED TO GROUND
5. AT 24° ± 2°C AND 5 VDC ±0.5% SUPPLY VOLTAGE
6. SUPPLY VOLTAGE RANGE IS 4.5 TO 9.0 VDC

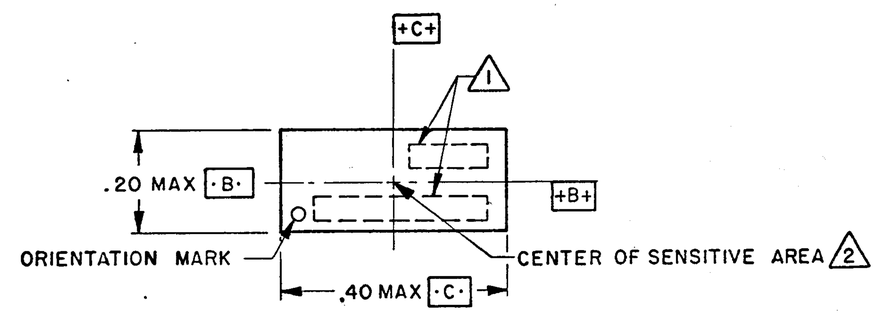

SWITCH DETAIL

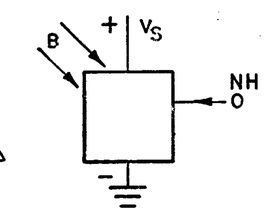

SWITCH SYMBOL

ABSOLUTE MAXIMUM RATING	
SUPPLY VOLTAGE (V_S)	-1.2 TO +10 VDC
VOLTAGE EXTERNALLY APPLIED TO OUTPUT	(-) 0.5 VOLT MAX (ON OR OFF CONDITION) (+) 10 VOLTS MAX (OFF CONDITION ONLY)
LOADS TO OUTPUT	20 MA (SINK)
TEMPERATURE	-40°C TO +100°C OPERATING -40°C TO +150°C STORAGE
MAGNETIC FLUX	NO LIMIT, THE CIRCUIT CANNOT BE DAMAGED BY MAGNETIC OVERDRIVE

ELECTRICAL CHARACTERISTICS (24±2°C, 5 VDC ± 0.5% SUPPLY)

	MIN	TYP	MAX	REMARKS
SUPPLY CURRENT		2.5 MA	4.0 MA	SWITCH IN OFF CONDITION
OUTPUT VOLTAGE (OPERATED)		+0.2 V	+0.4V 4	SINKING 8 MA
OUTPUT LEAKAGE CURRENT (RELEASED)			10 μA	LEAKAGE INTO SWITCH OUTPUT
OUTPUT SWITCHING TIME (SINKING 8 MA)				
RISE TIME		0.2μSEC	0.5μSEC	10% TO 90%
FALL TIME		0.1 μSEC	0.5μSEC	90% TO 10%
RATE OF OPERATION			100KHz	

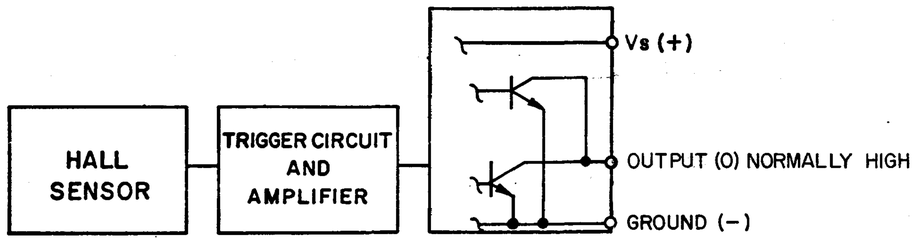

BLOCK DIAGRAM SHOWING CURRENT SINKING OUTPUT

55SS SERIES CHART I

DRAWING NUMBER M

ISSUE 9 10

REVISIONS

A	PR-3887	J A L 20 JUNE 74
B	C035566	D B W 18 JUL 75
C	C036503	C E B 2 FEB 76
D	C048802	T S M 26 DEC 80

DRAWN J A L 20 JUNE 74 CHECK D A W 28 JUN 74 CHECK T S M 26 DEC 80

PO-32843

THIS DRAWING COVERS A PROPRIETARY ITEM AND IS THE PROPERTY OF MICRO SWITCH, A DIVISION OF HONEYWELL. THIS DRAWING IS NOT TO BE COPIED OR USED WITHOUT THE APPROVAL OF MICRO SWITCH.

MICRO SWITCH a Honeywell Division

FED. MFG. CODE 91929

SOLID STATE SWITCH MAGNETICALLY OPERATED

CATALOG LISTING 55SS SERIES

CHART I

THIRD ANGLE PROJECTION

SCALE 3:1

DO NOT SCALE PRINT

UNLESS OTHERWISE SPECIFIED TOLERANCES ARE

ONE PLACE	(.0)	±.030
TWO PLACE	(.00)	±.015
THREE PLACE	(.000)	±.005
ANGLES		±

WEIGHT