REVISIONS			
LTR	DESCRIPTION	DATE	APPROVED

NOTES: UNLESS OTHERWISE SPECIFIED

1. P/N: PICO
   HOUSING & PLUNGER: MOLDED NYLON TYPE 6,6.
   AVAILABLE IN TEN COLORS.
   CONTACT BLADE: BERYLLIUM COPPER, GOLD PLATED
   PER MIL-G-45204 B TYPE 1
   0.00001" [0.000254] THK MINIMUM.
   SPRING: STAINLESS STEEL TYPE 302.

2. P/N: 9205-HS
   HEAT SHRINK: MOLDED NYLON. AVAILABLE IN BLACK.
   BODY: BRASS, 40UIN [1.02UM] MIN GOLD OVER NICKEL PLATED.
   CONTACT: BeCu OR PHOSPHOR BRONZE, 1.02UM(40UIN) MIN GOLD OVER NICKEL PLATED.

3. P/N W-701/COLOR
   28AWG 19X40 TINNED COPPER
   0.047 [1.19] O.D. PVC INSULATION
   AVAILABLE IN TEN COLORS.

4. PERFORMANCE
   MAXIMUM CURRENT: 1.0 AMPS
   MAXIMUM VOLTAGE: 600 W.V.D.C.
   MAXIMUM TEMPERATURE: 221°F (105°C)

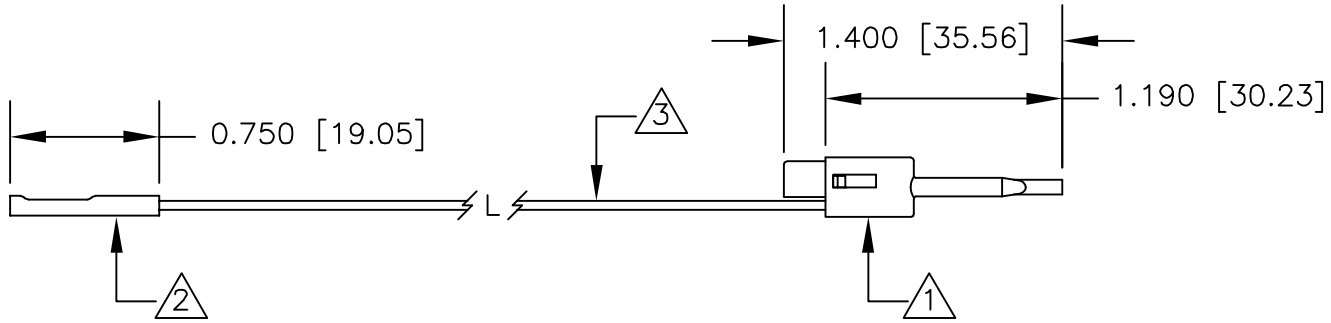

		UNLESS OTHERWISE SPECIFIED DIMENSIONS ARE IN INCHES TOLERANCES ARE: FRACTIONS ± DECIMALS .XX ± .XXX ± ANGLES ±	CONTRACT NO.	E-Z-HOOK® DIVISION OF TEKTEST INC. ARCADIA, CA 91006 U.S.A.
			APPROVALS / DATE	
			DRAWN R.L. 9/10	DESCRIPTION: PICO HOOK TO 0.025 [0.64] SQUARE SOCKET
		MATERIAL: SEE NOTE.	APPROVED BY	
		FINISH: SEE NOTE.		SIZE: A / CODE IDENT NO.: 08505 / DRAWING NO.: P703 / REV.
NEXT ASSY	USED ON			
APPLICATION		DO NOT SCALE DRAWING		SCALE 1:1 / SHEET 1 OF 1

THE INFORMATION CONTAINED IN THIS DOCUMENT IS PROPRIETARY TO E-Z-HOOK. THE INFORMATION IS NOT TO BE REPRODUCED WITHOUT PRIOR WRITTEN PERMISSION OF E-Z-HOOK, DIV. OF TEKTEST INC.
MAXIMUM TESTED RATINS IN A HANDS-FREE CONTROLLED ENVIRONMENT. MAXIMUM RATINGS ARE NOT TO BE USED CONCURRENTLY.