NOTES:
1. SUGGESTED MOUNTING HOLE = ø .228
2. HARDWARE IS INCLUDED.
3. PRE-FLATTEN/NOTCH DIMENSIONS:
   TOP: .386±.010
   BOTTOM: .448±.010 (03)
4. MAX REFLOW IS 245°C FOR 5 SECONDS.

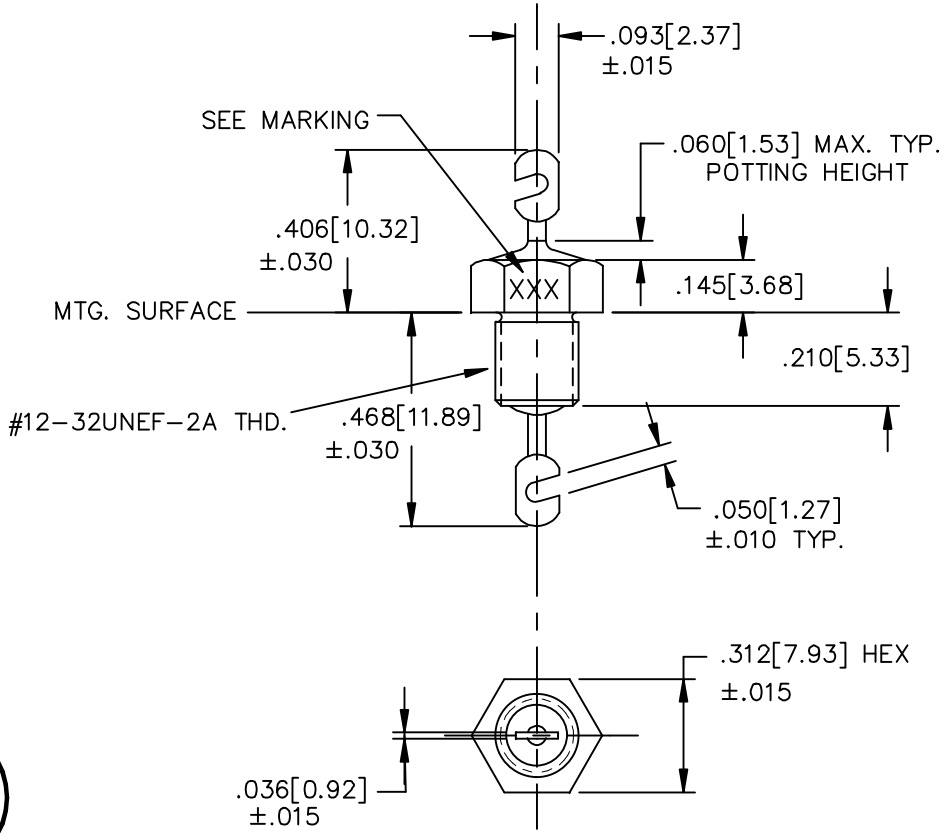

RoHS COMPLIANT

LEAD FINISH:	TIN/SILVER
BUSHING FINISH:	SILVER
CAPACITANCE	1000pF +100/-0%
TEMP. RANGE	-55°C TO 125°C
CURRENT	10 AMP MAX.
WORKING VOLTAGE	85°C VDC MAX. 125°C 250 VDC MAX.
D.C. RESISTANCE	.01ohms MAX.

MIN. I.L. PER MIL-STD-220 AT 25°C NO LOAD

FREQ. MHz	I.L. (db)
1	N/A
10	N/A
100	N/A
1 GHz	N/A
10 GHz	N/A

SCHEMATIC

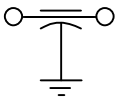

MARKING:
PART:
102P
BAG:
SCI 54F-804-023
LOT NUMBER
DATE CODE
QTY/BAG (200 MAX.)

REV. NO.	CHANGE NOTICE
03	CN #10417
02	CN 43614-ENG
01	CN 30522-CPD
00	CN 21145-CPD

TOLERANCES UNLESS OTHERWISE SPECIFIED
Fractions ± 1/64
Dec. .xx±
Dec. .xxx±.015
Angles ±0° 30′
CODE IDENT. NO. OLSP2

api technologies corp.
FAIRVIEW PENNSYLVANIA

Dwn. KAUFFMAN
Date 1-13-15
Engr. B. DEVINE
Scale NONE

Description FT CERAMIC FILTER
54F-804-023