MIL-PRF-12883/48

RSE/RSL 3 Pole/25 Amp

Relay Sockets

Mates with MS27743 Relays

Operating Range

Temperature:
-65ºC to 125ºC
Insulation Resistance:
1000 Megaohms Min.
Dielectric Withstanding Voltage:
1500 VRMS at Sea Level
500 VRMS at 80,000 ft.
Vibration:
MIL-STD-202, Method 204
Test Condition G
Shock:
MIL-STD-202, Method 213
Test Condition C

Materials

Socket Body:
Polyetherimide per ASTM-D5205
Grommet:
Silicone Rubber per A-A-59588
Hardware:
Stainless Steel or Steel w/
Cadmium Chromate Finish
Contact Retainers:
Stainless Steel
Socket Contacts:
Copper Alloy, Hard Gold Plated in
Accordance with SAE-AMS 2422

Low Profile Relay Sockets

MIL P/N M12883	APCD P/N	Mounting Stud	QTY	Size[1]	Contact P/N	Config.	Mating Relay
/48-01	RSE112061	Loose	2	16/16	/92-533	A	MS27743-06, -12, -18, -24
			9	12/12	/92-535		
/48-02	RSE112063	Fixed	2	16/16	/92-533	A	MS27743-06, -12, -18, -24
			9	12/12	/92-535		
/48-05	RSE112065	Loose	2	16/16	/92-533	B	MS27743-09, -15, -21, -27
			9	12/12	/92-535		
/48-06	RSE112067	Fixed	2	16/16	/92-533	B	MS27743-09, -15, -21, -27
			9	12/12	/92-535		

Extended Height Relay Sockets

MIL P/N M12883	APCD P/N	Mounting Stud	QTY	Size[1]	Contact P/N	Config.	Mating Relay
/48-03	RSL112105	Loose	2	16/16	/5-116	A	MS27743-06, -12, -18, -24
			9	12/12	/5-118		
/48-04	RSL112101	Fixed	2	16/16	/5-116	A	MS27743-06, -12, -18, -24
			9	12/12	/5-118		
/48-07	RSL112107	Loose	2	16/16	/5-116	B	MS27743-09, -15, -21, -27
			9	12/12	/5-118		
/48-08	RSL112103	Fixed	2	16/16	/5-116	B	MS27743-09, -15, -21, -27
			9	12/12	/5-118		

[1] *Mating End / Wire Barrel*

Mounting instructions can be found on page 25

Socket Configurations

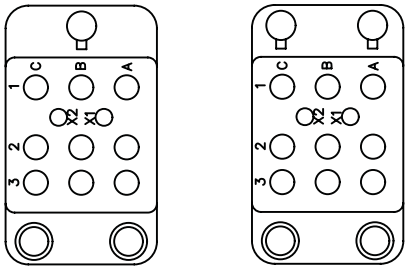

Relay Socket Weight

Relay Socket	Pounds	Grams
Extended Height	.129	55
Low Profile	.109	49

Recommended Mounting Panel Cutout

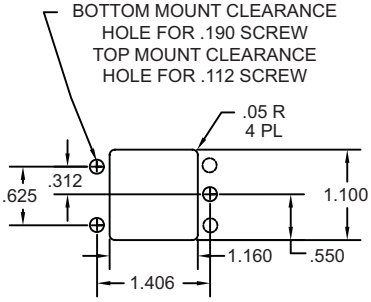

Relay Socket Dimensions

Side View

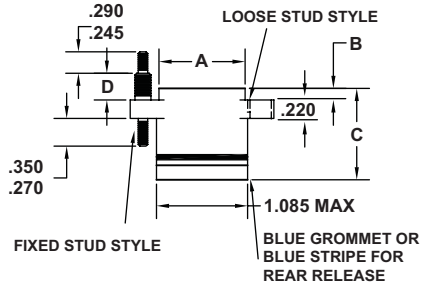

Relay Socket	A	B	C Max	D
Extended Height	1.03	.140-.135	1.25	.318
Low Profile	1.00	.093	.890	.290

Top View

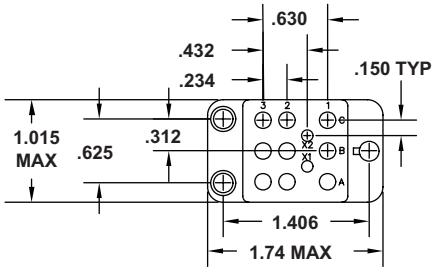

Amphenol Pcd

www.amphenolpcd.com Milaero@amphenolpcd.com 1-978-624-3400 72 Cherry Hill Drive Beverly, MA 01915