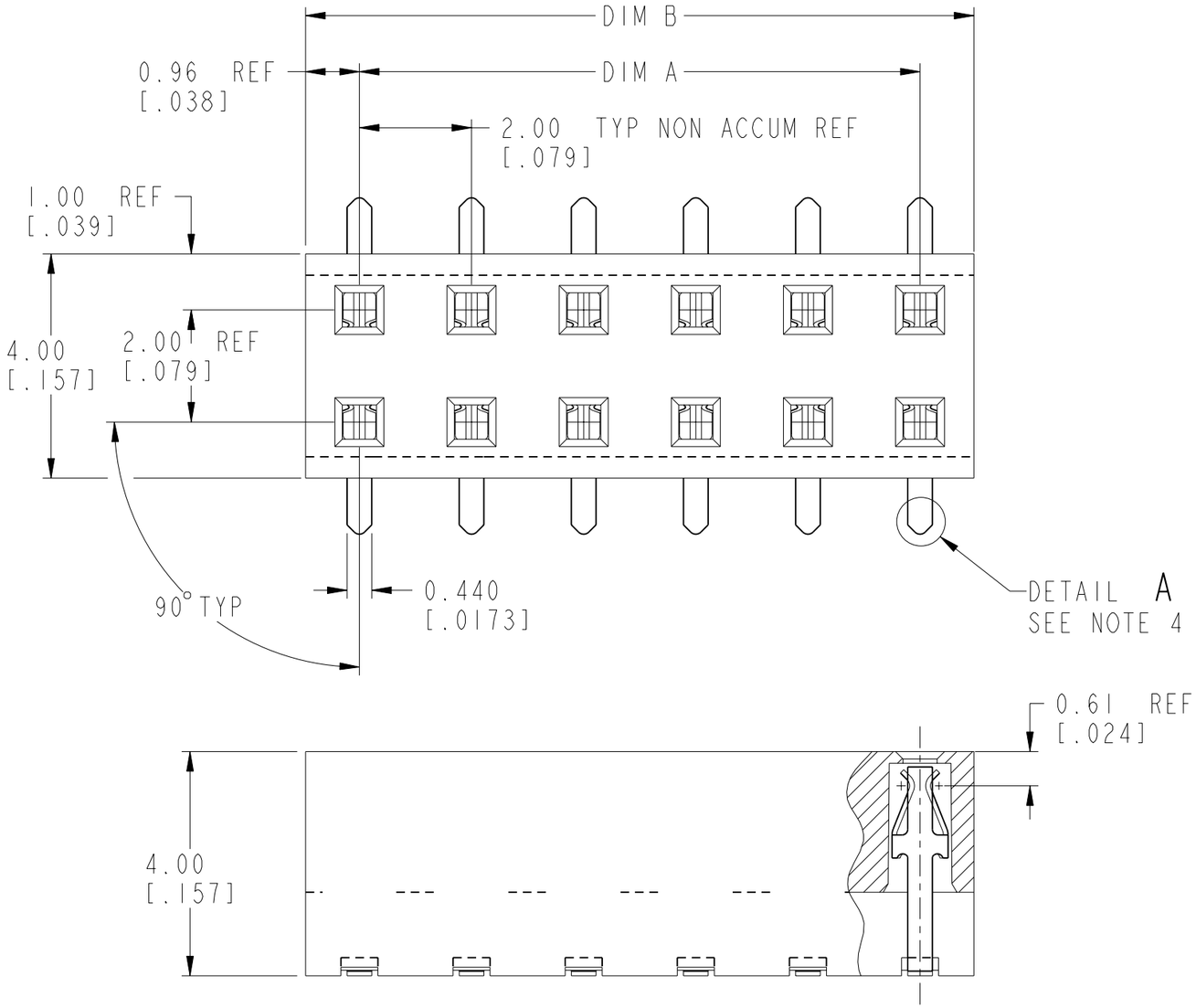

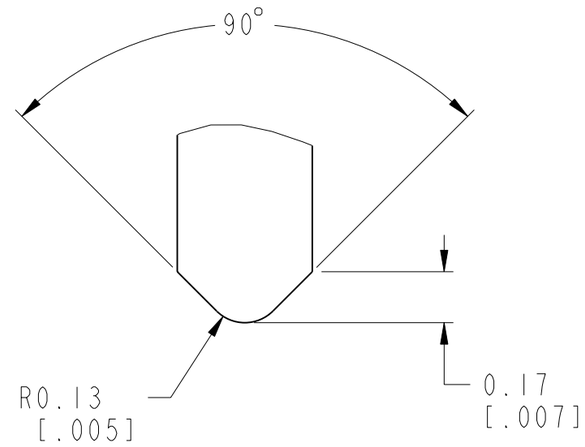

DETAIL A
SCALE 50:1

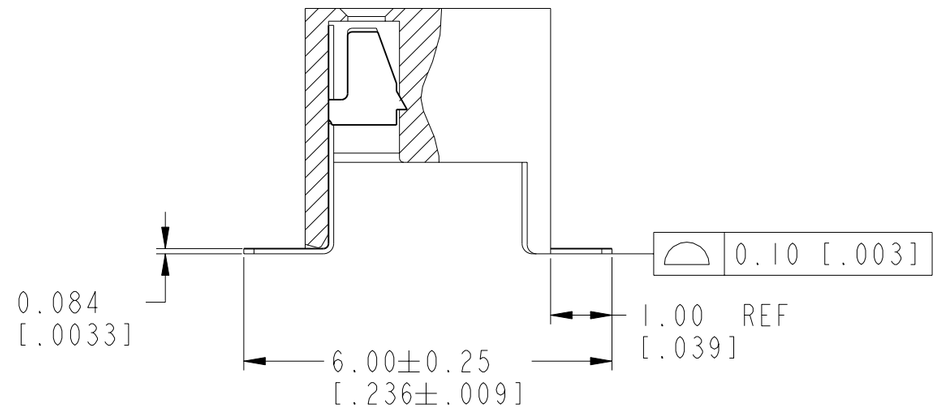

CONFIDENTIAL

rev	ecn no	dr	date
K	S40318	BSL	1994-12-20
L	S80115	BSL	1998-05-14
M	V94400	BSL	1999-12-01
N	S05-0064	KBM	2005-03-01
P	S10-0136	NBR	2010-06-28
-	-	-	-
-	-	-	-

www.fciconnect.com

surface - ISO 1302

tolerance std ISO 406 ISO 1101

TOLERANCES UNLESS OTHERWISE SPECIFIED

projection

MM/INCH

Dr	BS LOW	2000-01-06	ANGULAR	LINEAR	X.X/.XX	±0.3/.01
Eng	BS LOW	2000-01-06			X.XX/.XXX	±0.13/.005
Chr	KH LEE	2010-06-28	0°	±2°	X.XXX/.XXXX	±0.051/.0020
Appr	JOEY NG	2010-06-28	Product family		LPVCC	

size A3

Scale 10:1

ECN S10-0136

Spec ref -

title LOW PROFILE VCC
TOP ENTRY SMT 4.00 ASSY

dwg no 91812

Rev. P

catalog no -

CUSTOMER

sheet 1 of 3

Copyright FCI.

REV F - 2006-04-17

PDM: Rev:P STATUS:Released Printed: Nov 27, 2010

PRODUCT NO.	POSITIONS	DIM. A	DIM.B
91812-X04	2 X 2	2.00 / .079	3.92 / .154
-X06	2 X 3	4.00 / .158	5.92 / .233
-X08	2 X 4	6.00 / .236	7.92 / .312
-X10	2 X 5	8.00 / .315	9.92 / .391
-X12	2 X 6	10.00 / .394	11.92 / .469
-X14	2 X 7	12.00 / .472	13.92 / .548
-X16	2 X 8	14.00 / .551	15.92 / .627
-X18	2 X 9	16.00 / .630	17.92 / .706
-X20	2 X 10	18.00 / .709	19.92 / .784
-X22	2 X 11	20.00 / .787	21.92 / .863
-X24	2 X 12	22.00 / .866	23.92 / .942
-X26	2 X 13	24.00 / .945	25.92 / 1.020
-X28	2 X 14	26.00 / 1.024	27.92 / 1.099
-X30	2 X 15	28.00 / 1.102	29.92 / 1.178

PLATING OPTIONS OVER CONTACT AREA
0 = 0.20µm/8µ" Au
1 = 0.76µm/30µ" Au
3 = 0.38µm/15µ" Au

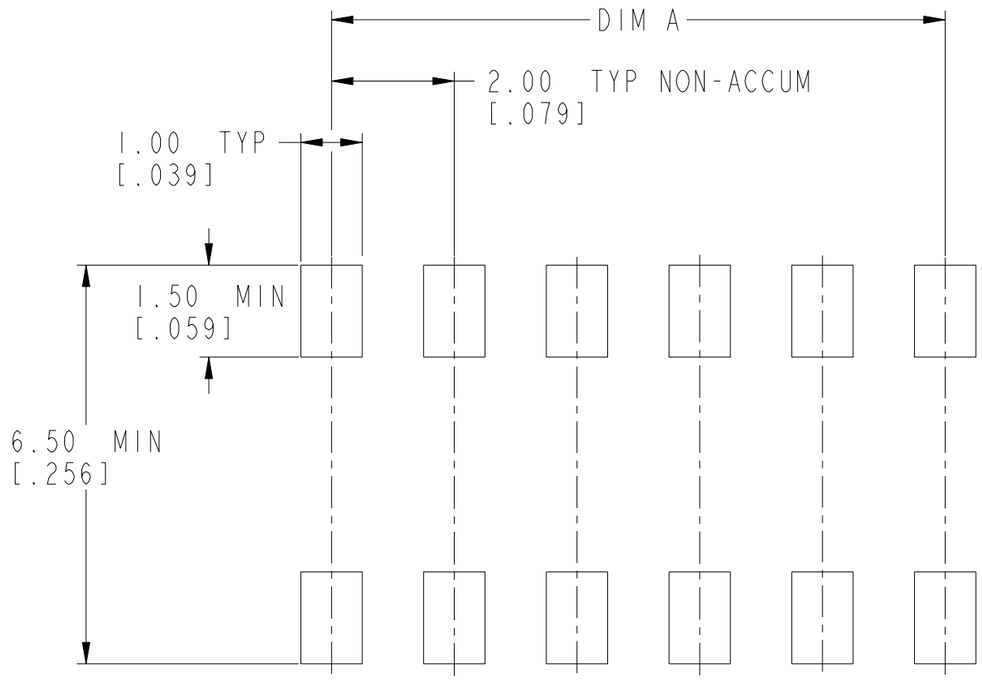

RECOMMENDED PAD LAYOUT

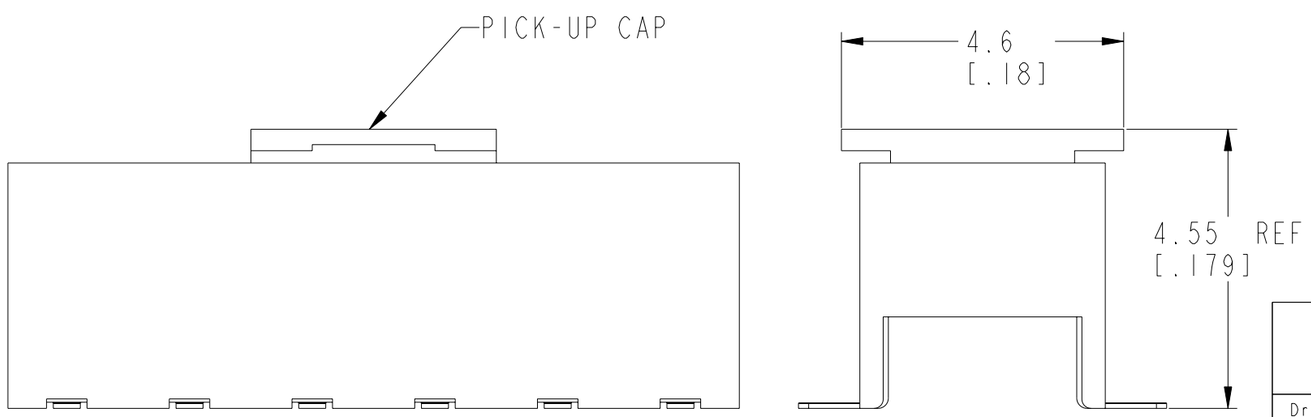

FIG. 1
NOTE 7 (b) & (d)

CONFIDENTIAL

www.fciconnect.com			surface - ISO 1302		tolerance std ISO 406 ISO 1101		projection	MM/INCH
			TOLERANCES UNLESS OTHERWISE SPECIFIED					
Dr	BS LOW	2000-01-06	ANGULAR	LINEAR	X.X/.XX	±0.3/.01	size A3	Scale 10:1
Eng	BS LOW	2000-01-06			X.XX/.XXX	±0.13/.005		
Chr	KH LEE	2010-06-28	0° ±2°		X.XXX/.XXXX	±0.051/.0020	ECN	S10-0136
Appr	JOEY NG	2010-06-28	Product family			LPVCC	Spec ref	-

title: LOW PROFILE VCC
TOP ENTRY SMT 4.00 ASSY

dwg no: 91812

Rev. P

catalog no -

CUSTOMER

sheet 2 of 3

Copyright FCI.

REV F - 2006-04-17

NOTES:

1. HOUSING MATERIAL : HIGH TEMP PLASTIC.

2. TERMINAL MATERIAL : BeCu.

3. TERMINAL RETENTION 0.5Kg/1.1 Lbs.

4. "V" CUT OPTIONAL - MANUFACTURING PROCESS OPTION.

P 5. SOLDER TAILS PLATING:
(a) SOLDERTAIL OF P/N:91812-XXX IS TIN/LEAD PLATED.
(b) SOLDERTAIL OF P/N:91812-XXXLF IS GOLD FLASH PLATED.

6. PRODUCT DESCRIPTION CODE :

XXXXX-XXXLF

- LEAD FREE. SEE NOTES 5(b) & 9
- TOTAL POSITIONS
- COTACT AREA PLATING
- BASE NUMBER

7. PACKAGING:
(a) XXXXX-XXX --- STD PACKAGING IN TUBE.
(b) XXXXX-XXXTR --- TAPE AND REEL (CONDUCTIVE) PACKAGING WITH PICK-UP CAP (SEE FIG 1).
(c) XXXXX-XXXTRN --- TAPE AND REEL (CONDUCTIVE) PACKAGING WITHOUT PICK-UP CAP.
(d) XXXXX-XXXCR --- TAPE AND REEL (NON-CONDUCTIVE) PACKAGING WITH PICK-UP CAP (SEE FIG 1).
(e) XXXXX-XXXCRN --- TAPE AND REEL (NON-CONDUCTIVE) PACKAGING WITHOUT PICK-UP CAP.

8. THE HOUSING WILL WITHSTAND EXPOSURE TO 255°C PEAK TEMPERATURE FOR 10 SECONDS IN A CONVECTION, INFRA-RED OR VAPOR PHASE REFLOW OVEN.

9. THIS PRODUCT MEETS EUROPEAN UNION DIRECTIVES AND OTHER COUNTRY REGULATIONS AS DESCRIBED IN GS-22-008.

P 10. A P SYMBOL WILL BE NEXT TO ANY DIMENSION, VIEW OR NOTE WHICH HAS BEEN MODIFIED WITH THE CURRENT DRAWING REVISION.

Copyright FCI.

CONFIDENTIAL

www.fciconnect.com			surface - ISO 1302		tolerance std ISO 406 ISO 1101		projection	MM/INCH
			TOLERANCES UNLESS OTHERWISE SPECIFIED					
Dr	BS LOW	2000-01-06	ANGULAR	LINEAR	X.X/.XX	±0.3/.01	size A3	Scale 10:1
Eng	BS LOW	2000-01-06			X.XX/.XXX	±0.13/.005		
Chr	KH LEE	2010-06-28	0° ±2°		X.XXX/.XXXX	±0.051/.0020	ECN	S10-0136
Appr	JOEY NG	2010-06-28	Product family			LPVCC	Spec ref	-

title	LOW PROFILE VCC TOP ENTRY SMT 4.00 ASSY	dwg no 91812	Rev. P
catalog no	-	CUSTOMER	sheet 3 of 3

REV F - 2006-04-17

PDM: Rev:P STATUS:Released Printed: Nov 27, 2010