Copyright FCI.

FCIconnect.com

PRODUCT NUMBER
10123764-001XLF

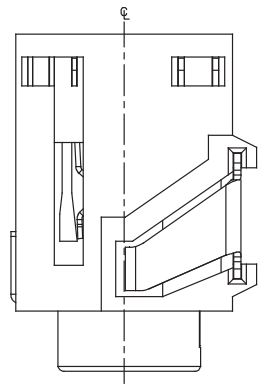

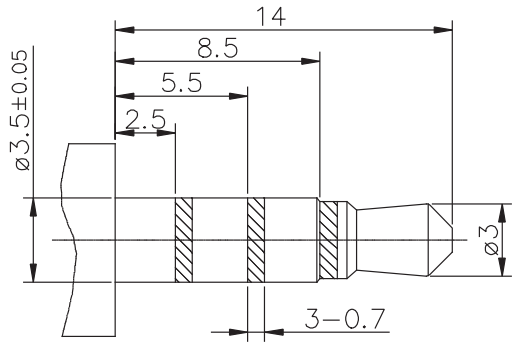

RECOMMENDED PLUG
ø3.5 4-POLESTANDARD PLUG

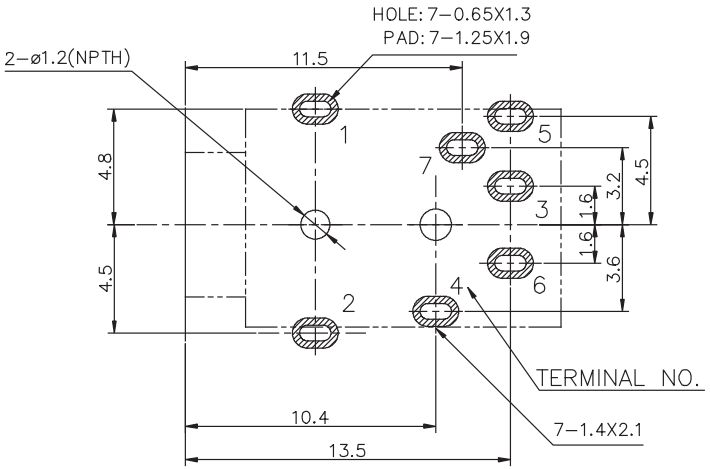

PCB HOLES(THE TOP VIEW) t=1.6mm
NOTE: GENERAL TOLERANCE: ±0.05mm

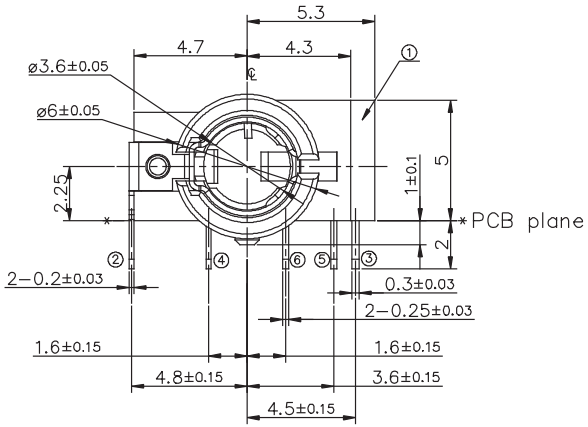

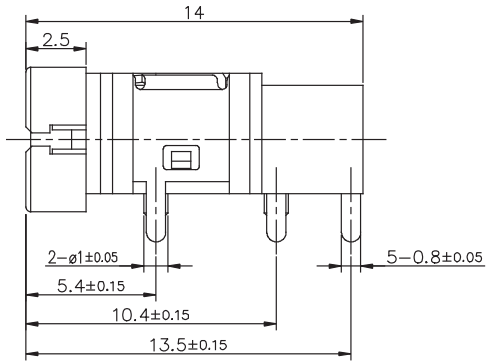

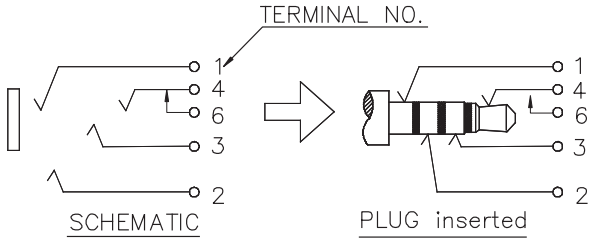

NO.	PART NAME	TER'NO.	QTY.	MATERIAL	REMARK
⑥	TERMINAL 6	6	1	COPPER ALLOY t=0.25	Au 1μ"Min
⑤	TERMINAL 4	4	1	COPPER ALLOY t=0.25	Au 1μ"Min
④	TERMINAL 3	3	1	COPPER ALLOY t=0.20	Au 1μ"Min
③	TERMINAL 2	2	1	COPPER ALLOY t=0.30	Au 1μ"Min
②	TERMINAL 1	1	1	COPPER ALLOY t=0.20	Au 1μ"Min
①	HOUSING		1	PBT UL94 V-0	BLACK

NOTES:
1. MATERIALS & PLATING: SEE MATERIAL TABLE
2. PRODUCT SPECIFICATION: GS-12-1144.
   PACKAGE SPECIFICATION: GS-14-2297.
3. THIS PRODUCT MEETS EUROPEAN UNION DIRECTIVES AND OTHER COUNTRY REGULATIONS AS DESCRIBED IN GS-47-0004.
4. THE HOUSING WILL WITHSTAND EXPOSURE TO 245°C PEAK TEMPERATURE FOR 10 SECONDS IN A WAVE SOLDERING APPLICATION.
5. PART NUMBER DEFINITION:
   10123764-001XLF
   └ PACKAGE CODE:
     T: TRAY
     R: TAPE & REEL

ltr	ecn no	dr	date
A		TAI	2013-05-08
B	ELX-T-15747	TAI	2013-09-06

dr	KENNY TAI	2012-12-17
engr	KENNY TAI	2012-12-17
chr	KENNY TAI	2013-04-10
appd	PM ZHENG	2013-05-10

mat'l. code | surface | tolerance ASME Y14.5 | projection | product family
tolerances unless otherwise specified: angles X°±5°; linear 16<L≤63 ±0.4; 4<L≤16 ±0.3; L≤4 ±0.2
MM
scale
title: 3.5mm AUX JACK, 4 SEGMENTS
dwg no 10123764 | sheet 1 of 1 | size A4
type CUSTOMER Drawing
sheet index | revision B | sheet 1

form: A4mmXLc