PRODUCT NO.
10017251-__2240ELF

REVISIONS				
REV	DESCRIPTION	ECN	BY	DATE
A	RELEASED	J03-0220	K.O	22/May/'03
B	REVISED	J03-0300	K.O	11/Jul/'03
C	REVISED	J03-0452	K.O	14/Nov/'03
E	REVISED	J04-0041	M.Y	15/Jan/'04
F	REVISED	J04-0336	M.Y	27/Sep/'04
G	REVISED	J04-0473	M.Y	05/Jan/'05
H	REVISED	J04-0447	M.Y	20/Jan/'05
J	REVISED	J05-0345	M.Y	10/Jun/'05
K	REVISED	J05-0783	M.Y	16/Nov/'05

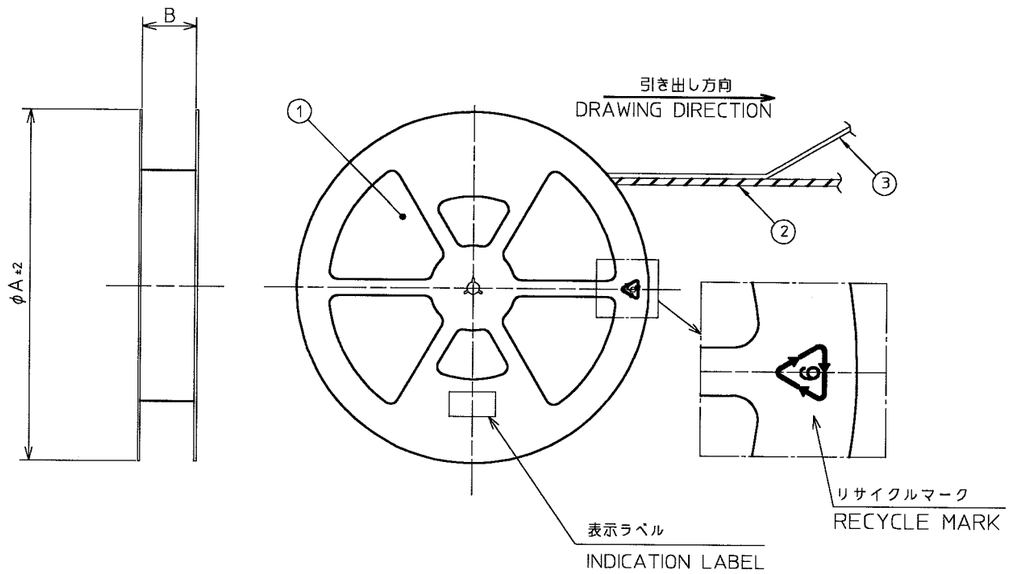

エンボステープ梱包型番 EMBOSS TAPE	寸 法 DIMENSIONS		
	φ A	B	C
10017251-152240ELF~452240ELF	φ330	25.5 ±1	24
10017251-112240ELF	φ330	17.5 ±1	16

PT.NO.	PARTS NAME	PRODUCT NO.	MATERIAL	Q'TY
1	REEL	————	POLYSTYRENE	1
2	EMBOSS TAPE	————	PET	1
3	COVER TAPE	————	POLYESTER	———
4	CONNECTOR	10017251-__224LF	10017251 SHEET2	4500

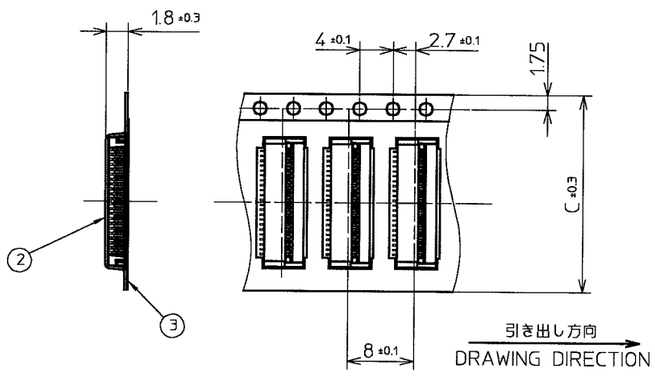

10017251-1121_0E~4521_0E

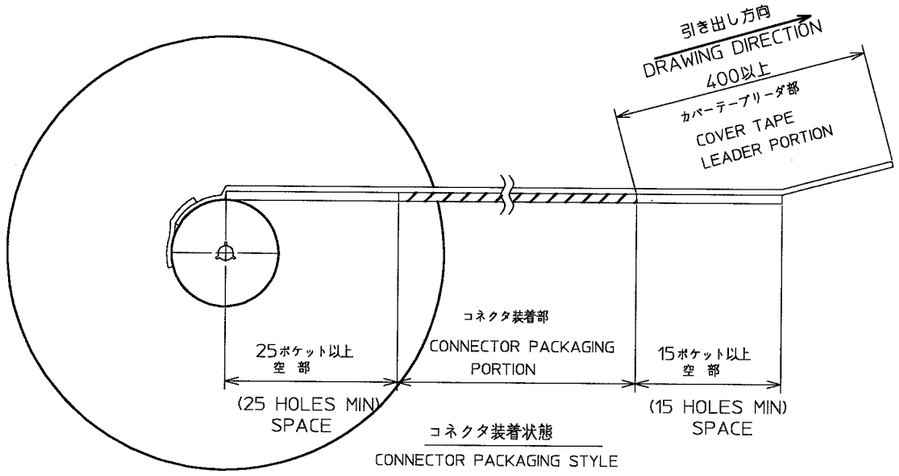

コネクタ装着状態
CONNECTOR PACKAGING STYLE

注記
1.本製品は、自動実装(SMT)対応、FPC用コネクタのプラスチックテープ梱包品である。
2.プラスチック(エンボス)テープ 及びリールの形状寸法は、JIS C 0806
(電子部品のテーピング(表面実装部品))に準ずる。

NOTES
1.THIS IS PLASTIC TAPE PACKAGED CONNECTOR USED FOR FPC AND COPES WITH AUTOMATIC MOUNTING (SMT)
2.SEE JIS 0806 (PACKING OF ELECTRONIC COMPONENTS ON CONTINUOUS TAPES (SURFACE MOUNTING DEVICES))

SHEET INDEX	ISSUE	K	F
	SH NO.	1	2

TOLERANCES UNLESS OTHERWISE SPECIFIED	MAT SEE NOTE	DR M.Yamashita	DATE 16/Nov/'05	CUSTOMER COPY
LINEAR	FINISH —//—	ENGR M.Yamashita	16/Nov/'05	THIRD ANGLE PROJ
		CHK K.Ohzawa	16/Nov/'05	
ANGLES		APPD S.Akahori	11/16/'05	UNIT MM ~~INCH~~

FCI

TITLE	エンボステープ梱包品 EMBOSS TAPE PACKAGE			
PRODUCT FAMILY	58FF FLEX 0.3			CODE JP
SCALE	SIZE C	DWG. NO. 10017251	REV K	SHEET 1 OF

DF-003A REV E

DO NOT SCALE PRINT THIS INFORMATION IS CONFIDENTIAL AND IS DISCLOSED TO YOU ON CONDITION THAN NO FURTHER DISCLOSURE IS MADE BY YOU TO OTHER THAN FCI PERSONNEL WITHOUT WRITTEN AUTHORIZATION FROM FCI JAPAN K.K.

PRODUCT NO.
10017251-__224LF

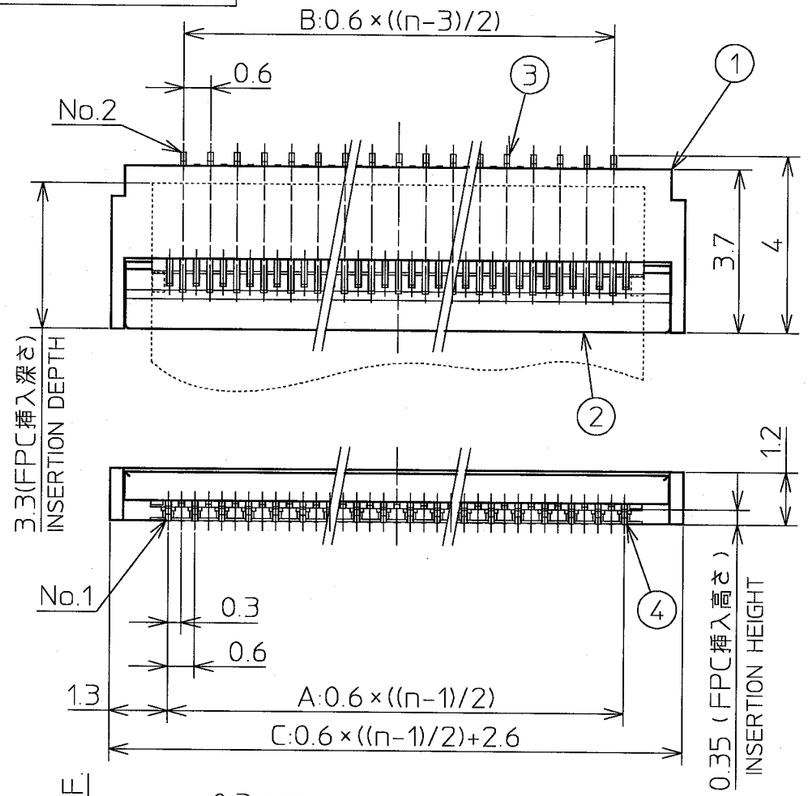

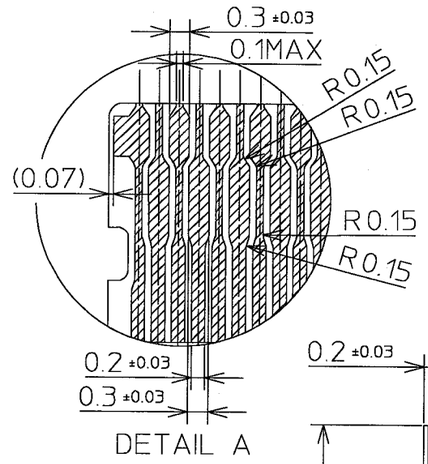

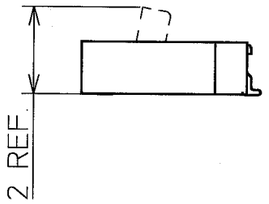

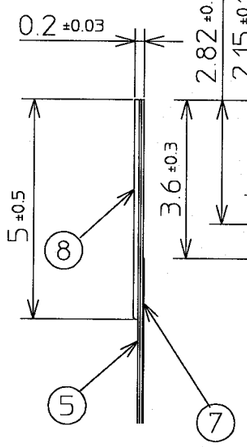

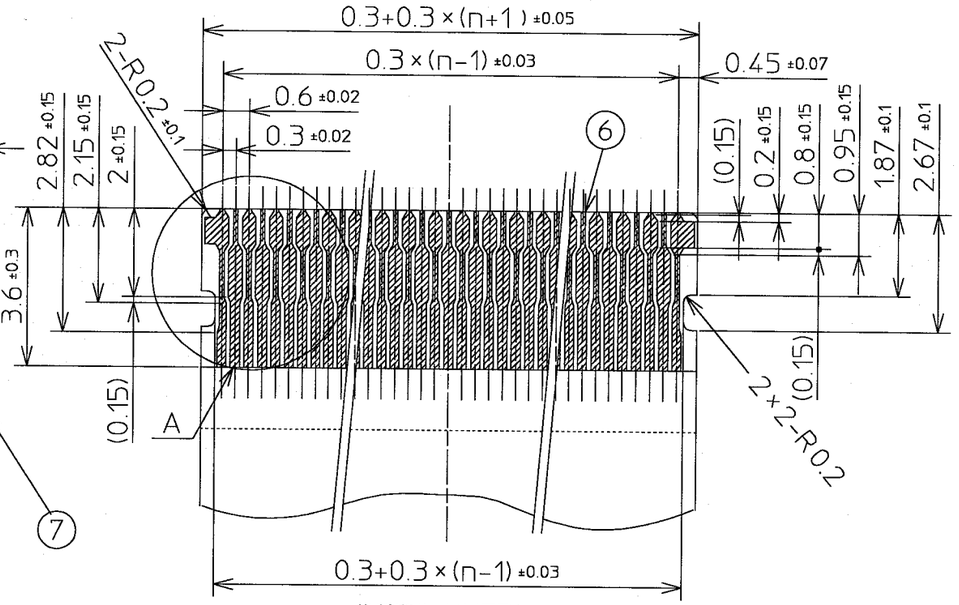

推奨導体寸法(FPC)
RECOMMENDED CONDUCTOR DIMENSION

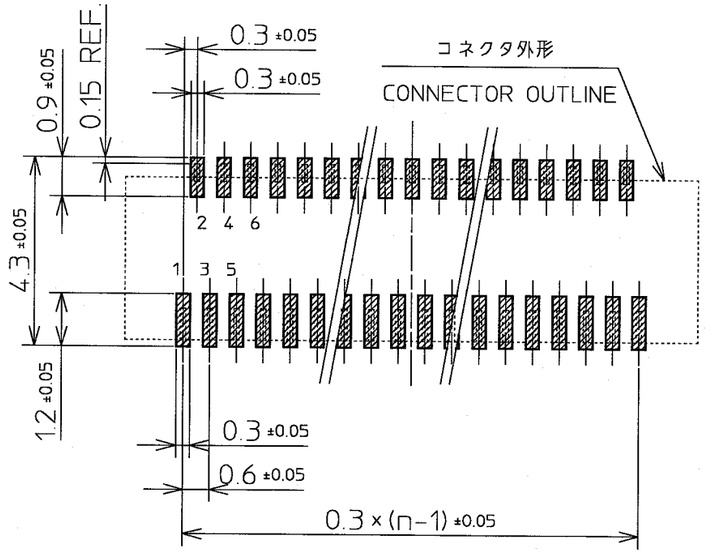

推奨基板パターン寸法
RECOMMENDED P.C.BOARD LAYOUT

FPC

	PARTS NAME	MATERIAL
5	BASE FILM	POLYAMIDE
6	CONDUCTOR	COPPER FOIL
7	OVERLAY	POLYAMIDE
8	STIFFENER	POLYAMIDE

REVISIONS

REV	DESCRIPTION	ECN	BY	DATE
A	RELEASED	J03-0220	K.O	22/May/'03
B	REVISED	J03-0300	K.O	11/Jul/'03
C	REVISED	J03-0452	K.O	14/Nov/'03
E	REVISED	J04-0041	M.Y	15/Jan/'04
F	REVISED	J05-0345	M.Y	10/Jun/'05

CONNECTOR

	PARTS NAME	MATERIAL	QTY	DESCRIPTION
1	HOUSING	THERMOPLASTIC	1	COLOR:WHITE
2	ACTUATOR	THERMOPLASTIC	1	COLOR:BLACK
3	CONTACT A	COPPER ALLOY	(n-1)/2	
4	CONTACT B	COPPER ALLOY	(n+1)/2	

n:NO.OF CONTACT

PRODUCT No.	NO. OF CONTACT	A	B	C
10017251-11224LF	11	3.0	2.4	5.6
10017251-15224LF	15	4.2	3.6	6.8
10017251-19224LF	19	5.4	4.8	8.0
10017251-23224LF	23	6.6	6.0	9.2
10017251-25224LF	25	7.2	6.6	9.8
10017251-27224LF	27	7.8	7.2	10.4
10017251-31224LF	31	9.0	8.4	11.6
10017251-39224LF	39	11.4	10.8	14.0
10017251-45224LF	45	13.2	12.6	15.8

NOTE.

1. FPCの補強板接着には、熱硬化接着剤を使用し、接着方式は熱圧着とする。
   Adhesive method of supporting tape shall be heat crimping method and thermosetting adhesive material shall be used.
2. 本製品は、GS-22-008に記載されたヨーロッパ連合指令と他国の規制に適合しています。
   This product meets European Union Directives and other country regulations as described in GS-22-008.
3. メッキ仕様 Finish

	SURFACE TREATMENT
10017251-__224LF	GOLD OVER NICKEL PLATE

SHEET INDEX	ISSUE																	
	SH NO.																	

TOLERANCES UNLESS OTHERWISE SPECIFIED		MAT	DR M.YAMASHITA	DATE 10/Jun/'05	CUSTOMER COPY	TITLE 0.3mm PITCH CONNECTOR (UPPER TYPE)
LINEAR	±0.3	SEE NOTE	ENGR M.YAMASHITA	10/Jun/'05	THIRD ANGLE PROJ	PRODUCT FAMILY 58FF FLEX 0.3
ANGLES	±1°	FINISH —	CHK M.Koga	10/Jun/'05	UNIT MM ~~INCH~~	SCALE / SIZE B / DWG. NO. 10017251 / REV F / SHEET 2OF
			APPD H.Takatsuka	6/10/'05		CODE JP

FCI

DO NOT SCALE PRINT
DF-004A REV F

THIS INFORMATION IS CONFIDENTIAL AND IS DISCLOSED TO YOU ON CONDITION THAT NO FURTHER DISCLOSURE IS MADE BY YOU TO OTHER THAN FCI PERSONNEL WITHOUT WRITTEN AUTHORIZATION FROM FCI JAPAN K.K.